USB2.0 Extender Control Chip CH317

Datasheet

Version: 2A

https://wch-ic.com

1. Overview

CH317 is a USB2.0 extender control chip, which breaks through the limit of USB transmission distance of no more than 5 meters. It extends USB signals by more than 100 meters through low-cost network cables, uses optical fiber lines, extends distances up to km. It supports USB high-speed, full-speed, low-speed, hot-swappable devices, and does not need to install drivers, is compatible with all OSs. CH317 also supports HUB expansion, switch penetration, and can be widely used in computer peripherals, industrial control, medical equipment, security monitoring, etc.

The scheme is a dual-chip scheme, which is composed of CH317 plus a third-party Gigabit Ethernet PHY or optical fiber interface PHY and peripheral auxiliary components. According to different transmission media, it can be divided into two types: network cable extension and optical fiber extension.

The application block diagram is as follows:

Figure 1 Block diagram of network cable extension scheme

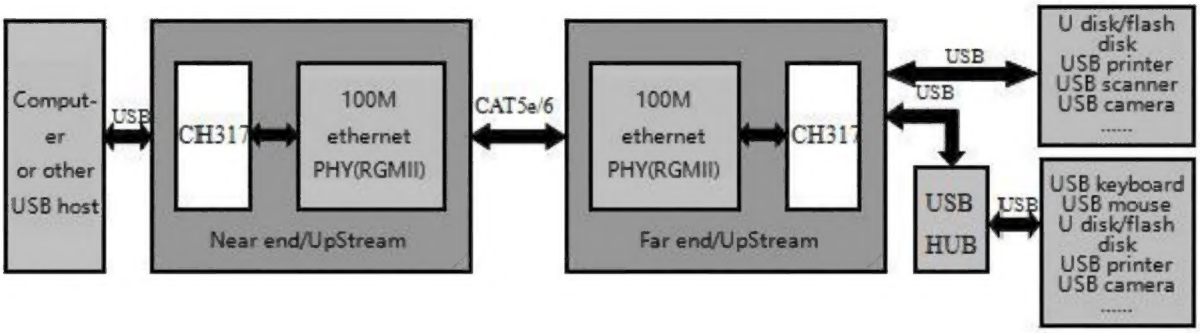

Figure 2 Block diagram of optical fiber extension scheme

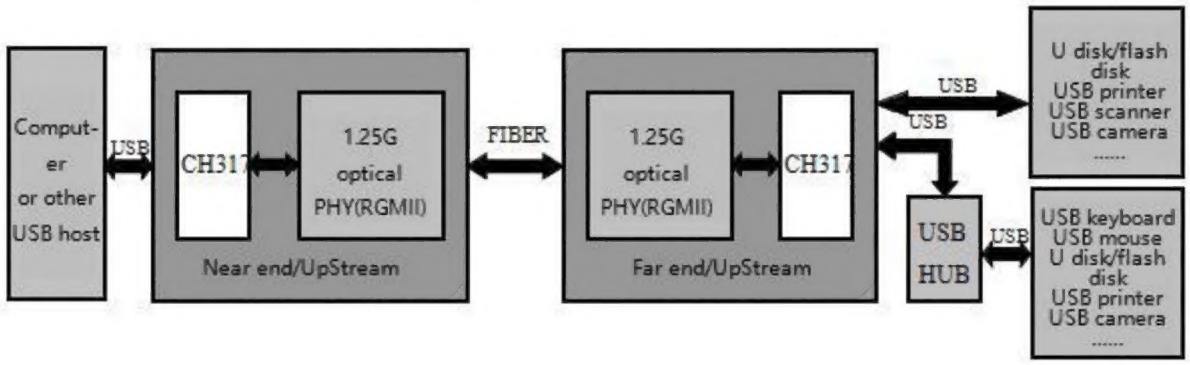

2. Features

- Support USB2.0 high-speed, plus HUB chip can support low/full-speed device.
- Support USB control transfer, bulk transfer, interrupt transfer, synchronous/isochronous transfer.
- Support USB-HUB expansion, USB printer, scanner, camera, U disk, keyboard, mouse, etc.
- Auto identify USB High-Speed, Full-Speed or Low-Speed devices.
- No need to install additional software, compatible with all OSs.
- Support hot-swappable USB devices, plug and play.

- Support standard RGMII interface Gigabit PHY, the transmission distance depends on the cable, support network cable extension, typically up to 100 meters for Cat5e cables, 170 meters for Cat6 cables, and 6 km for fiber optic extension. USB non-real-time transmission can reach over 10 kilometers.
- With Gigabit PHY chip, it can realize transformer isolation or optical isolation of USB2.0 high-speed signal.
- Support switch penetration, extended by adding network cable through the switch, or integrated with other support network transmission signals.
- Support 2 sets of I/O synchronous extension control, enable remote power on/off and restart functions.
- 12M clock output, which can be used for clock input of HUB chip.
- The same chip can auto identify whether to enter Host or Device mode, without configuration.
- 3.3V single power external input, support 2.5VRGMII interface voltage.
- Support USB2.0 high-speed, plus HUB chip can support low/full-speed devices.

2. Application

Computer peripherals
KVM extender
Conference system
Industrial control
Medical equipment
Security monitoring